Digital control kit EVAL_600W_12V_LLC

From **analog** to **digital** control

KIT_600W_LLC_DI_CTRL

Di Domenico Francesco (IFAT PMM ACDC AE)
Zechner Florian (IFAT PMM ACDC AE)

Digital control card



With XMC4200-Q48K256 AB

- ARM® Cortex®-M4, 80MHz, incl. single cycle DSP MAC and floating point unit (FPU)
- 8-channel DMA + dedicated DMA for USB
- USB 2.0 full-speed device
- CPU Frequency: 80MHz
- eFlash: 256kB including hardware ECC
- 40kB SRAM
- Package: PG-LQFP-48

Ordercode: **KIT_600W_LLC_DI_CTRL**

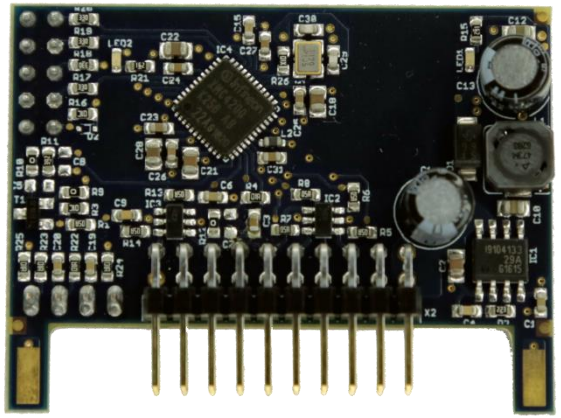

Copyright © Infineon Technologies AG 2017. All rights reserved.

BOM (Rework)

Part	Value	Pcs	Tolerance	Device	Package	Description	Assembling info	Manufacturer
C3	10n/50V	1		C-EU_C0805	C0805	CAPACITOR, European symbol		
R19	330R	1	±1%	R-EU_R0805	R0805	RESISTOR, European symbol		
R20	330R	1	±1%	R-EU_R0805	R0805	RESISTOR, European symbol		
R36	n.a.	1		R-EU_R0805	R0805	RESISTOR, European symbol	disassemble	
IC1	Board	1		Board	PCB	KIT_600W_LLC_DI_CTRL		Infineon

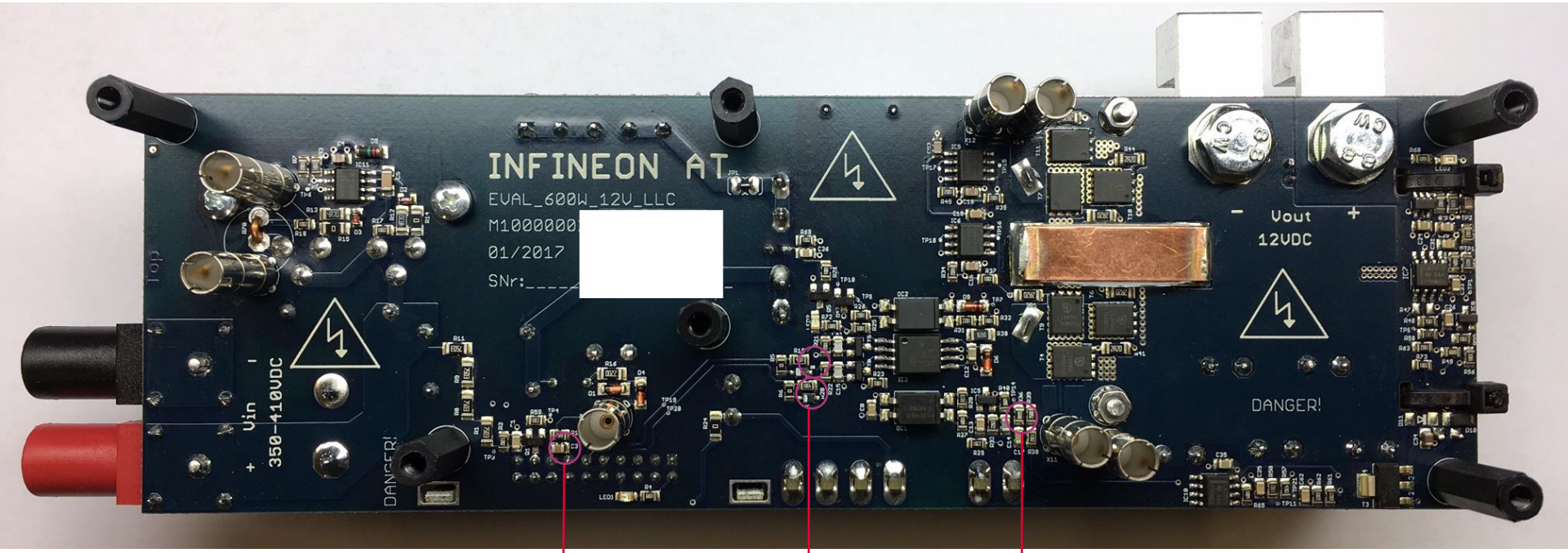

Copyright © Infineon Technologies AG 2017. All rights reserved.

Digital Control Card

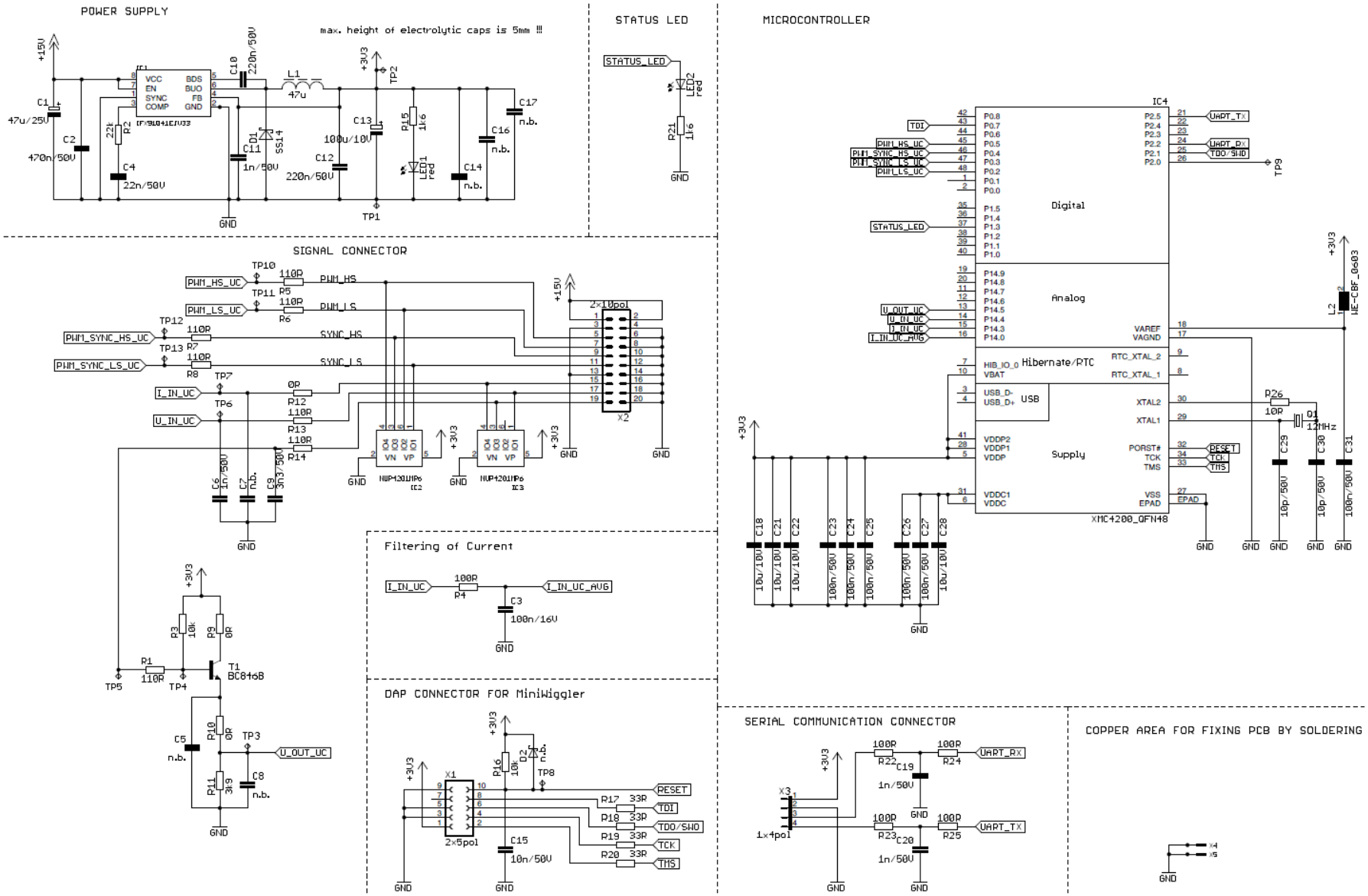

Copyright © Infineon Technologies AG 2017. All rights reserved.

KIT_600W_LLC_DI_CTRL

Newsletter Kontakt Bezugsquellen Deutsch myInfineon Anmeldung

Produkte Applikationen Tools Über Infineon Karriere

Search

› Home › Products › Evaluation Boards › KIT_600W_LLC_DI_CTRL

KIT_600W_LLC_DI_CTRL

- Übersicht
- Parametrisierung
- Bestellen
- Support

Beschreibung:

This adapter kit is intended for use when replacing an analog control card with its digital alternative. The kit offers as a replacement option Infineon's XMC4200 microcontroller ARM Cortex.
Related boards:

- EVAL_600W_12V_LLC_C7
- EVAL_600W_12V_LLC_P7

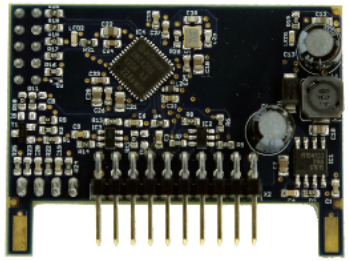

Zusammenfassung der Merkmale:

- Replacement to analog control with the Infineon XMC4200 Microcontroller ARM Cortex
- Full digital control
- Accurate driving scheme of both primary and secondary MOSFETs
- Compatibility with all Infineon EVAL_600W_12V_LLC boards

Vorteile:

- 80+ Titanium Stardard achieved
- Optimal use of CoolMOS™ and OptiMOS™ BIC devices
- Prevention/protection of LLC critical operating conditions
- ZVS achieved in the entire load range

Zielanwendungen:

- Server SMPS

Solution Finder

MOSFET IGBT Vreg MCU More

- ESD Protection
- Bipolar Transistor
- Diode (Rectifier)
- Smart Switch
- Transceivers
- Sim Models
- Eval Boards
- Infineon Tools
- IGBT Tools

Reset Find >

Copyright © Infineon Technologies AG 2017. All rights reserved.



Part of your life. Part of tomorrow.

Infineon